RevNo	Revision note		Date	Signature	Checked

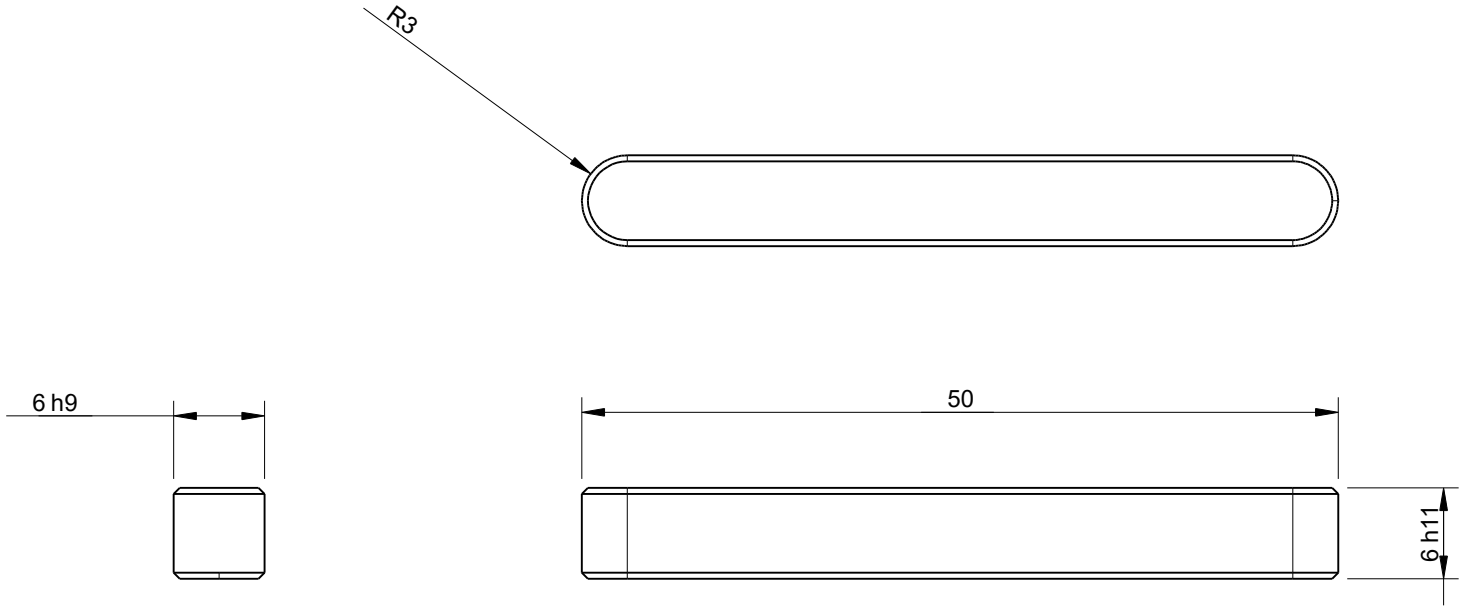

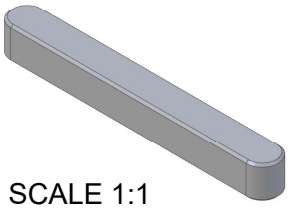

SCALE 1:1

Itemref	Quantity	Title/Name, designation, material, dimension etc			Article No./Reference	
Drawn by Kevin Damen		Checked by	Approved by - date	File name	Date 14-9-2022	Scale 2:1

Units: mm
Tolerances: +/- 0.1mm unless otherwise specified
Material: Steel C45

1381

www.damencnc.com

1381 6x6x50mm DIN 6885 A
Parallel key,Steel C45

Edition

Sheet 1 OF 1