RevNo	Revision note	Date	Signature	Checked

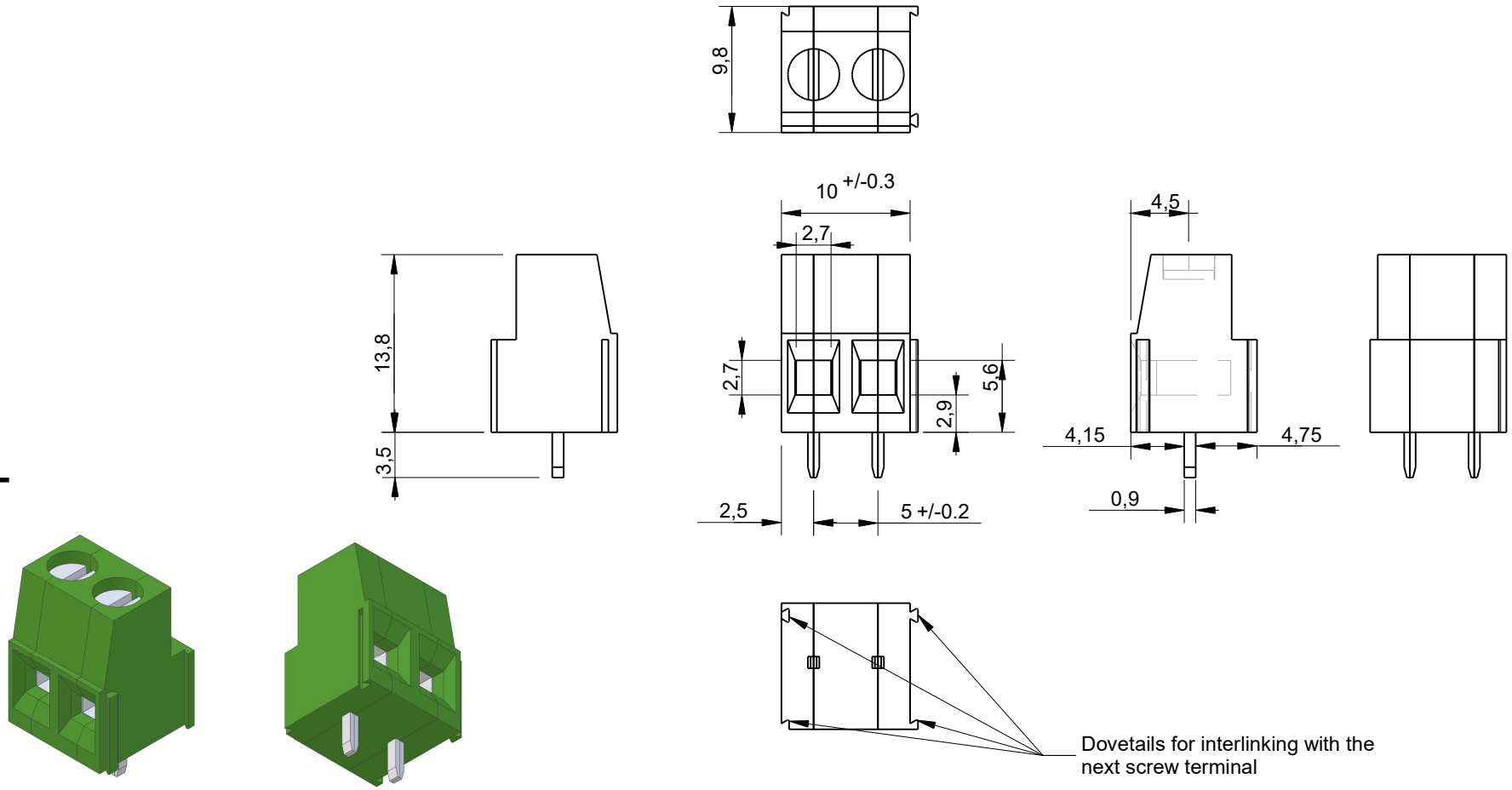

Units	mm
Tolerances	± 0.1mm unless otherwise specified
Material Insulator	PA6/66 (Green)
Material Housing	Copper Alloy / Ni
Terminal Screw	Steel / Zn
Wire Guard	Copper Alloy / Ni + Sn

Itemref	Quantity	Title/Name, designation, material, dimension etc			Article No./Reference	
Drawn by Kevin Damen		Checked by	Approved by - date	File name	Date 16-1-2021	Scale 2:1

2002

www.damencnc.com

2002	Edition	Sheet
		1 OF 1