RevNo	Revision note		Date	Signature	Checked

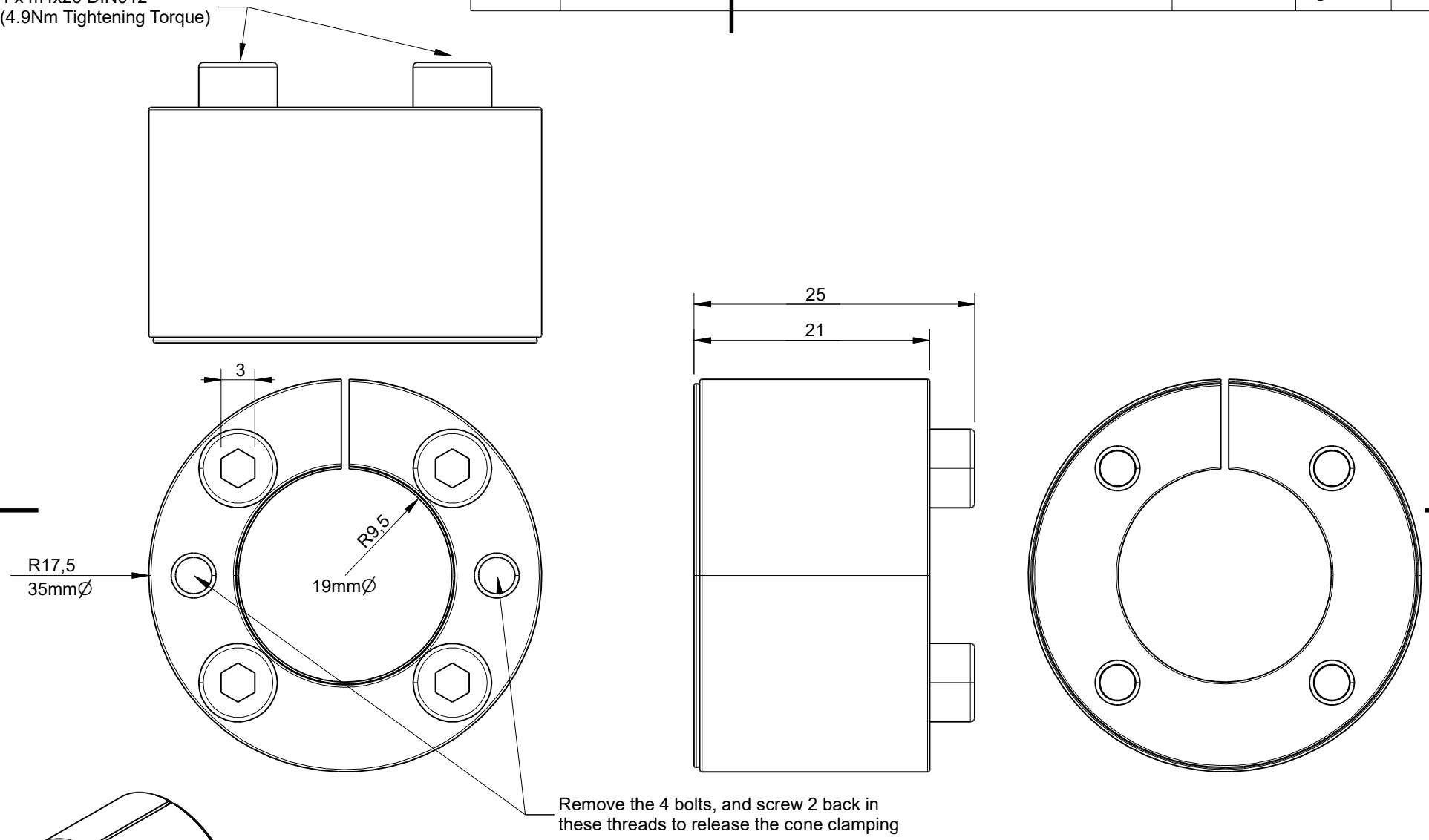

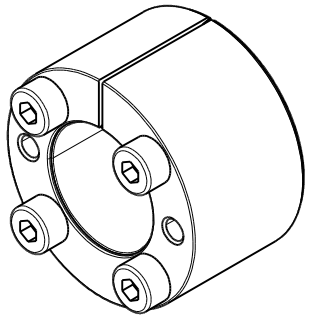

Itemref	Quantity	Title/Name, designation, material, dimension etc			Article No./Reference	
Drawn by Kevin Damen		Checked by	Approved by - date	File name	Date 6-1-2020	Scale 2:1
			5148		Edition	Sheet 1 OF 1