RevNo	Revision note		Date	Signature	Checked

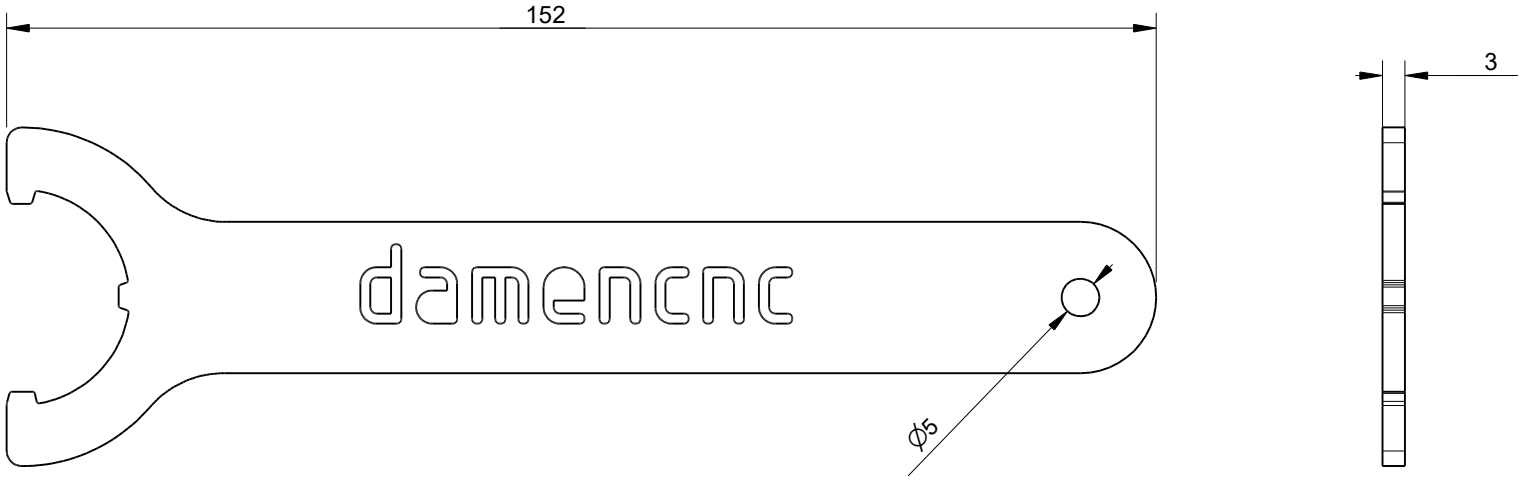

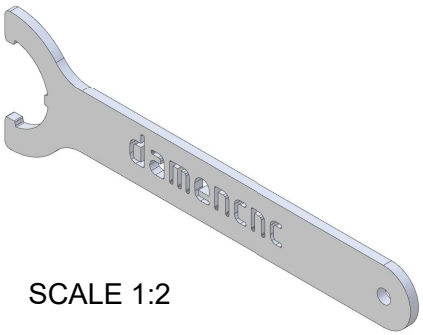

SCALE 1:2

Itemref	Quantity	Title/Name, designation, material, dimension etc			Article No./Reference	
Drawn by Kevin Damen		Checked by	Approved by - date	File name	Date 30-9-2022	Scale 1:1
848				www.damencnc.com		
				848 Wrench for GUK 03 m17x1 Locking Nuts	Edition	Sheet 1 OF 1

Units: mm
Tolerances: +/- 0.1mm unless otherwise specified
Material: 3mm Stainless Steel